Powerdot

CONTENT:

x1

x1

x1

A DRILL

B INSERT

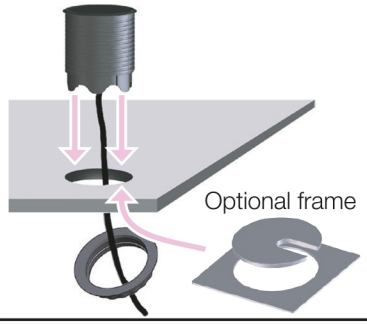

C TURN CLOCKWISE & PLUG IN

Turn the plastic fastening nut as far up the thread as possible. Make sure that it has been thoroughly tightened. Lastly, plug the Schuko plug into the wall socket.

1 CONNECT

Connect plug to Powerdot.

2 RELEASE

Rotate counter clockwise.

3 ADJUST

The inner part should now be loose. Adjust to desired level (see next step).

- 2 **USB Charger** (5V, 2.4 A)
- 1 **feed-throughs** (Ø9.5 mm)
- 1 **Schuko socket** /w 1250 mm cable

4 ADJUST LEVELS

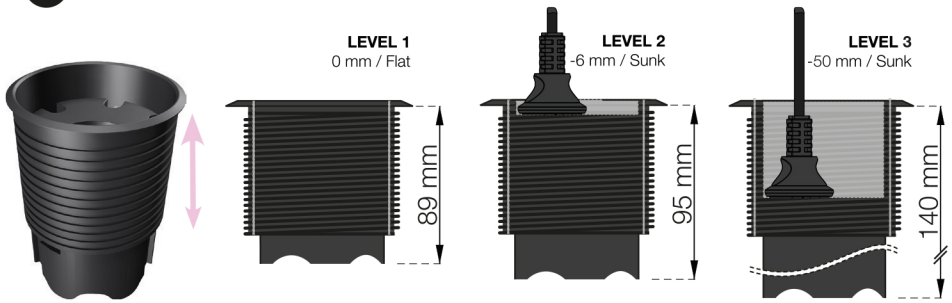

5a LOCK Level 1 & 2

Rotate clockwise.

5b LOCK Level 3

Rotate.

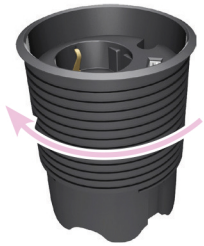

Patent pending PCT, China, EP

Revised 200901