Powerdot MINI - 2 USB-C PD Charger

Side View (Grommet)

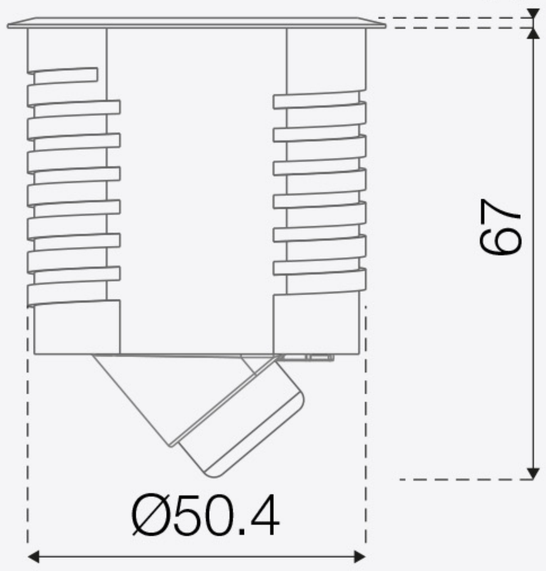

Top View (Grommet)



Oriented view (Grommet, nut & cable)

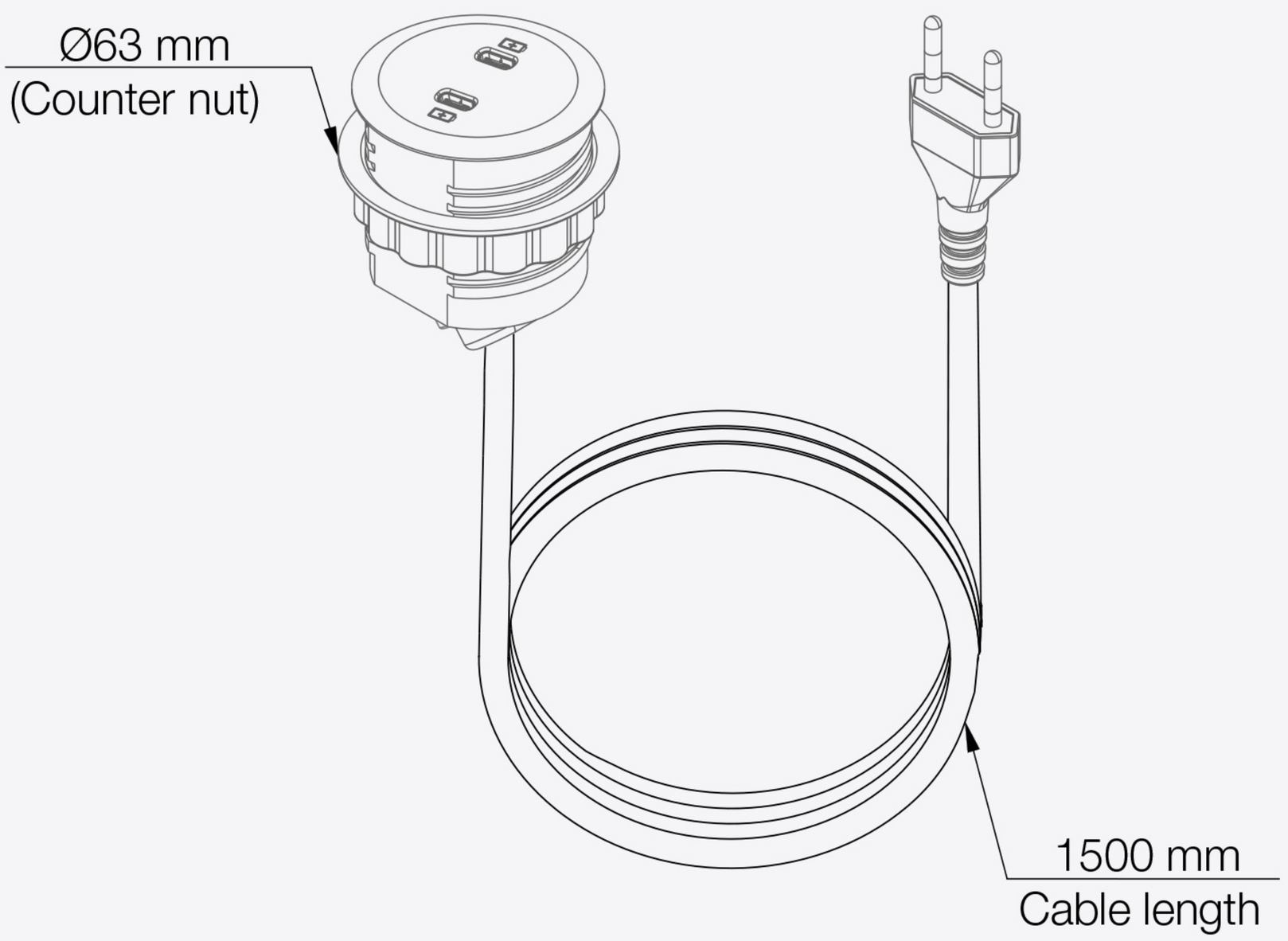

Maximum table thickness: 30 mm
Recommended hole cut: Ø51 mm